Electrolux PROFESSIONAL

Modular Cooking Range Line thermaline 80 - Half Module Freestanding Electric Fry Top, 1 Side, with Backsplash H=800

ITEM #

MODEL #

NAME #

SIS #

AIA #



588371 (MAHAFBDDAO)	Electric Fry Top with smooth chrome Plate, one-side operated with backsplash
588375 (MAHCFBDDAO)	Electric Fry Top with ribbed chrome Plate, one-side operated with backsplash

Short Form Specification

Item No.

Unit constructed according to DIN 18860_2 with 20 mm drop nose top and 70 mm recessed plinth. Internal frame for heavy duty sturdiness in stainless steel. 2 mm top in 1.4301 (AISI 304). Flat surface construction, easily cleanable. THERMODUL connection system enables seamless worktop when units are connected and avoids soil penetrating. Chromium-plated mild steel cooking surface with non-stick finishing for optimal grilling. Powerblock heating system for optimal temperature distribution. Stainless steel high splash guards on the rear and sides. Large drain hole allows draining of cooking juices into a large collector. Overheat protection switches off the supply in case of overheating. Standby function saves energy and quickly recovers maximum power. Metal knobs with embedded hygienic silicon "soft" grip enable easier handling and cleaning.
IPX5 water resistant certification.
Configuration: Freestanding, one-side operated with backsplash.

Main Features

- Large drain hole on cooking surface permits the draining of residual cooking juices into a large collector placed under the cooking surface.
- Overheat protection: a temperature sensor switches off the supply in case of overheating.
- Stainless steel high splash guards on the rear and sides of cooking surface.
- Units have separate controls for each half module of the cooking surface.
- All major components may be easily accessed from the front.
- THERMODUL connection system creates a seamless work top when units are connected to each other thus avoiding soil penetrating vital components and facilitating the removal of units in case of replacement or service.
- Metal-covered knobs with embedded hygienic "soft-touch" grip for easier handling and cleaning. The special design of the controls prevents infiltration of liquids or soil into vital components.
- Large visible digital display manufactured in tempered glass to resist heat and chemicals, showing temperatures or power settings. The display also shows on/off status of the appliance and on/off status of the heating elements.
- Powerblock heating system for optimal temperature distribution.

Construction

- Cooking surface to be completely smooth or completely ribbed.
- 2 mm top in 1.4301 (AISI 304).
- Unit constructed according to DIN 18860_2 with 20 mm drop nose top and 70 mm recessed plinth.
- Flat surface construction with minimal hidden areas to easily clean all surfaces
- IPX5 water resistance certification.
- Cooking surface in chromium-plated mild steel with non-stick finishing for optimum grilling results.
- Internal frame for heavy duty sturdiness in stainless steel.

Sustainability

- Standby function for energy saving and fast recovery of maximum power.

APPROVAL:

Optional Accessories

- Connecting rail kit for appliances with backsplash, 800mm — PNC 912497 ❑
- Portioning shelf, 400mm width — PNC 912522 ❑
- Portioning shelf, 400mm width — PNC 912552 ❑
- Folding shelf, 300x800mm — PNC 912577 ❑
- Folding shelf, 400x800mm — PNC 912578 ❑
- Fixed side shelf, 200x800mm — PNC 912583 ❑
- Fixed side shelf, 300x800mm — PNC 912584 ❑
- Fixed side shelf, 400x800mm — PNC 912585 ❑
- Stainless steel front kicking strip, 400mm width — PNC 912594 ❑
- Stainless steel side kicking strips left and right, against the wall, 800mm width — PNC 912622 ❑
- Stainless steel side kicking strips left and right, back-to-back, 1610mm width — PNC 912625 ❑
- Stainless steel plinth, against wall, 400mm width — PNC 912802 ❑
- Connecting rail kit for appliances with backsplash: modular 80 (on the left), ProThermetic tilting (on the right), ProThermetic stationary (on the left) to ProThermetic tilting (on the right) — PNC 912977 ❑
- Connecting rail kit for appliances with backsplash: modular 80 (on the right), ProThermetic tilting (on the left), ProThermetic stationary (on the right) to ProThermetic tilting (on the left) — PNC 912978 ❑
- Back panel, 400x800mm, for units with backsplash — PNC 913022 ❑
- Stainless steel panel, 800x800mm, against wall, left side — PNC 913094 ❑
- Stainless steel panel, 800x800mm, flush-fitting, against wall, right side — PNC 913098 ❑
- Endrail kit, flush-fitting, with backsplash, left — PNC 913113 ❑
- Endrail kit, flush-fitting, with backsplash, right — PNC 913114 ❑
- Endrail kit (12.5mm) for thermaline 80 units with backsplash, left — PNC 913204 ❑
- Endrail kit (12.5mm) for thermaline 80 units with backsplash, right — PNC 913205 ❑
- U-clamping rail for back-to-back installations with backsplash (to be ordered as S-code) — PNC 913226 ❑
- Insert profile D=800mm — PNC 913230 ❑
- Perforated shelf for warming cabinets and cupboard bases (one-side operated TL80-85-90 and two-side operated for TL80) — PNC 913233 ❑
- Energy optimizer kit 14A - factory fitted — PNC 913244 ❑
- Side reinforced panel only in combination with side shelf for against the wall installations, left — PNC 913264 ❑
- Side reinforced panel only in combination with side shelf, for against the wall installations, right — PNC 913266 ❑
- Shelf fixation for TL80-85-90 one-side operated, TL80 two-side operated — PNC 913279 ❑
- Filter W=400mm — PNC 913663 ❑
- Stainless steel dividing panel, 800x800mm, (it should only be used between Electrolux Professional thermaline Modular 80 and thermaline C80) — PNC 913669 ❑
- Electric mainswitch 25A 4mm2 NM for modular H800 electric units (factory fitted) — PNC 913676 ❑
- Stainless steel side panel, 800x800mm, flush-fitting (it should only be used against the wall, against a niche and in between Electrolux Professional thermaline and ProThermetic appliances and external appliances - provided that these have at least the same dimensions) — PNC 913685 ❑

ACC_CHEM

- C41 HI-TEMP RAPID DEGREASER, 1 pack of six 1 lt. bottles (trigger incl.) — PNC 0S2292 ❑

Electrolux PROFESSIONAL

Modular Cooking Range Line
thermaline 80 - Half Module Freestanding
Electric Fry Top, 1 Side, with Backsplash H=800

Electric

Supply voltage:	400 V/3N ph/50/60 Hz
Total Watts:	5.1 kW

Key Information:

Cooking Surface Depth:	615 mm
Cooking Surface Width:	300 mm
Working Temperature MIN:	80 °C
Working Temperature MAX:	280 °C
External dimensions, Width:	400 mm
External dimensions, Depth:	800 mm
External dimensions, Height:	800 mm
Storage Cavity Dimensions (width):	340 mm
Storage Cavity Dimensions (height):	330 mm
Storage Cavity Dimensions (depth):	740 mm
Net weight:	91 kg
Configuration:	One-Side Operated
Cooking surface type:	
588371 (MAHAFBDDAO)	Smooth
588375 (MAHCFBDDAO)	Ribbed
Cooking surface - material:	Chromium Plated mild steel mirror

Sustainability

Current consumption:	7.4 Amps

Electrolux PROFESSIONAL

Modular Cooking Range Line
thermaline 80 - Half Module Freestanding Electric Fry Top, 1 Side, with Backsplash H=800

Front

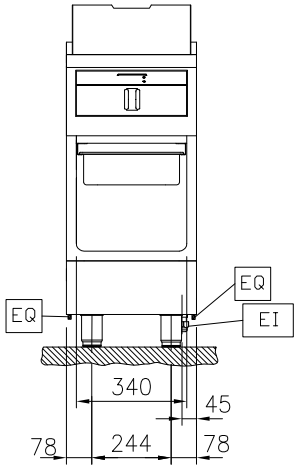

Side

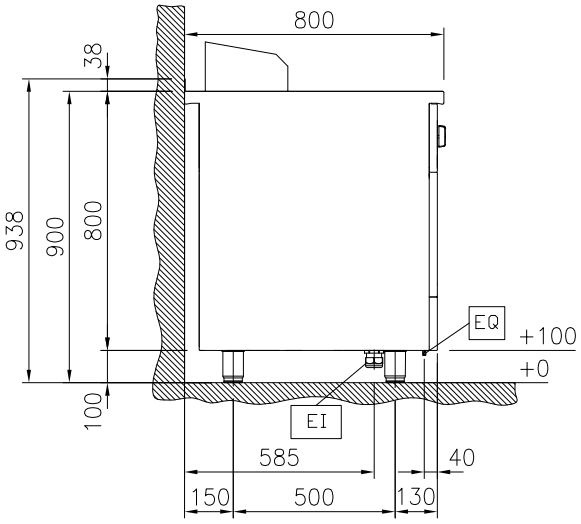

EI = Electrical inlet (power)
EQ = Equipotential screw

Top

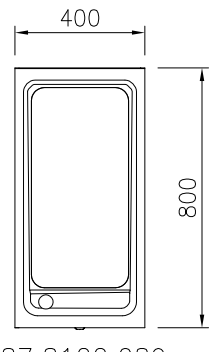

Front

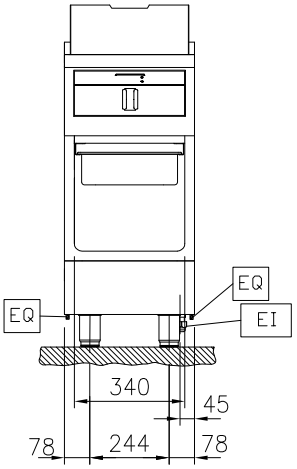

Side

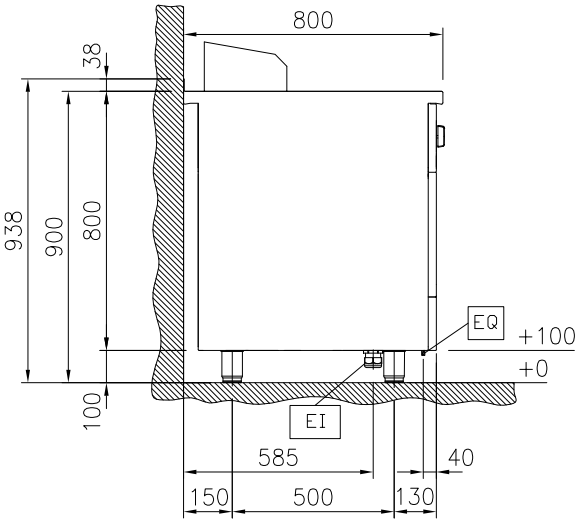

EI = Electrical inlet (power)
EQ = Equipotential screw

Top

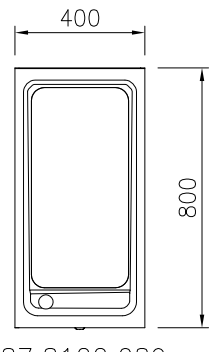

Modular Cooking Range Line
thermaline 80 - Half Module Freestanding Electric Fry Top, 1 Side, with Backsplash H=800

The company reserves the right to make modifications to the products without prior notice. All information correct at time of printing.

2026.11.23